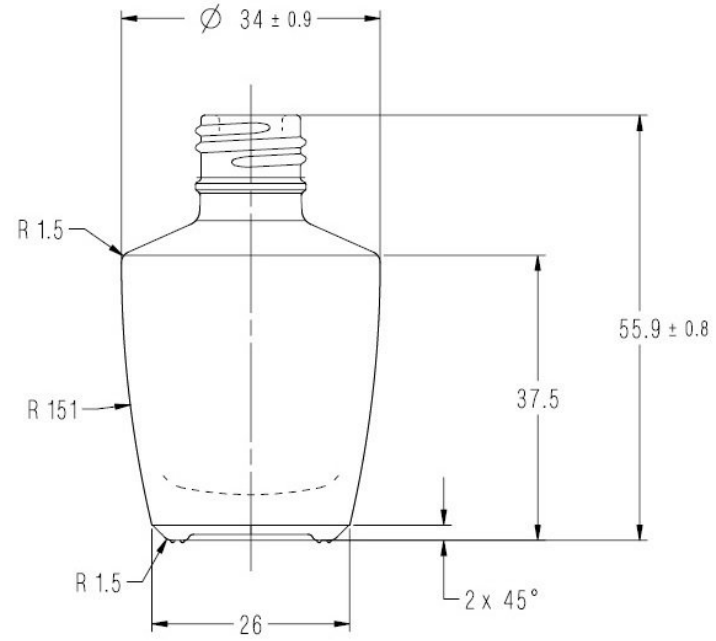


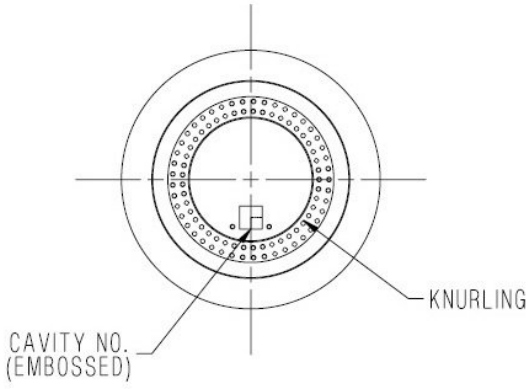


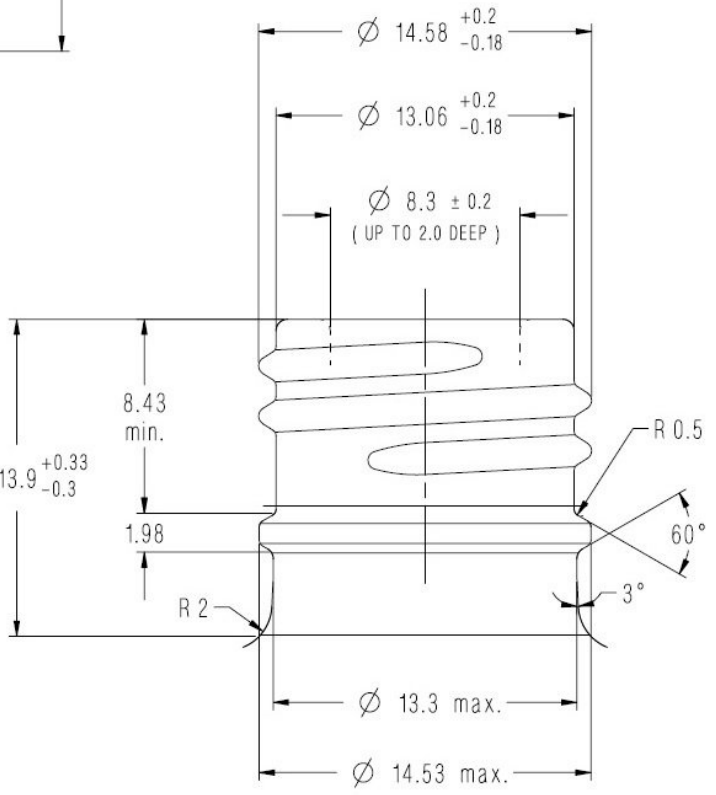


START OF THD. _____ 0.87 $^{+0.33}_{-0.30}$

NO. OF TURNS _____ 2.0

T . P . I . _____ 12

| | |
|---|---|
| FOR APPROVAL : | |
| CUSTOMER: | |
| SIGN: | |
| NAME: | |
| DATE: | |

| | | | |
|---|---|---|---|
| REV.NO | REVISION DESCRIPTION | DATE | REV. BY |

| | | | | | |
|---|---|---|---|---|---|
| WARE | | 15ml ABIGAIL | | | |
| ALL DIM'S ARE IN MM DO NOT SCALE DRAWING | | SCALE: | TYPE & COLOUR | THROUGH BORE (min) | PROD. CATG.: |
| | | 1 : 1 | III , FLINT | ∅ 6.5 | 3FPF |
| DES'D BY | DATE: | OVERFLOW CAP. (ml) | FILLING CAP. (ml) | WEIGHT (g) (APPROX.) | NECK FINISH |
| | | 16.8 ± 0.8 | ----- | 38.5 | GCMI 15/415/405 |
| CHK'D BY | APP'D BY | DRG.NO.: | | | REV. A |